AddStoris
Towel hook
Finish: **Chrome** Article Number: **41742000**

Description

product features

- wall-mounted
- material: metal
- with mounting material
- concealed fastening
- diameter drill hole: 6 mm

Design awards

iF DESIGN AWARD 2021

reddot winner 2021

Product image

Scale drawing

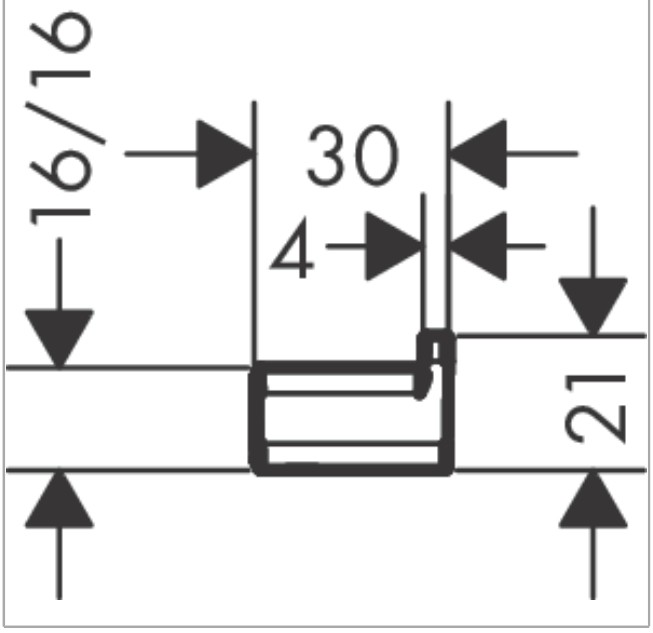

AddStoris
Towel hook
Finish: **Chrome** Article Number: **41742000**

Exploded Drawing

Year of production: **>04/21**

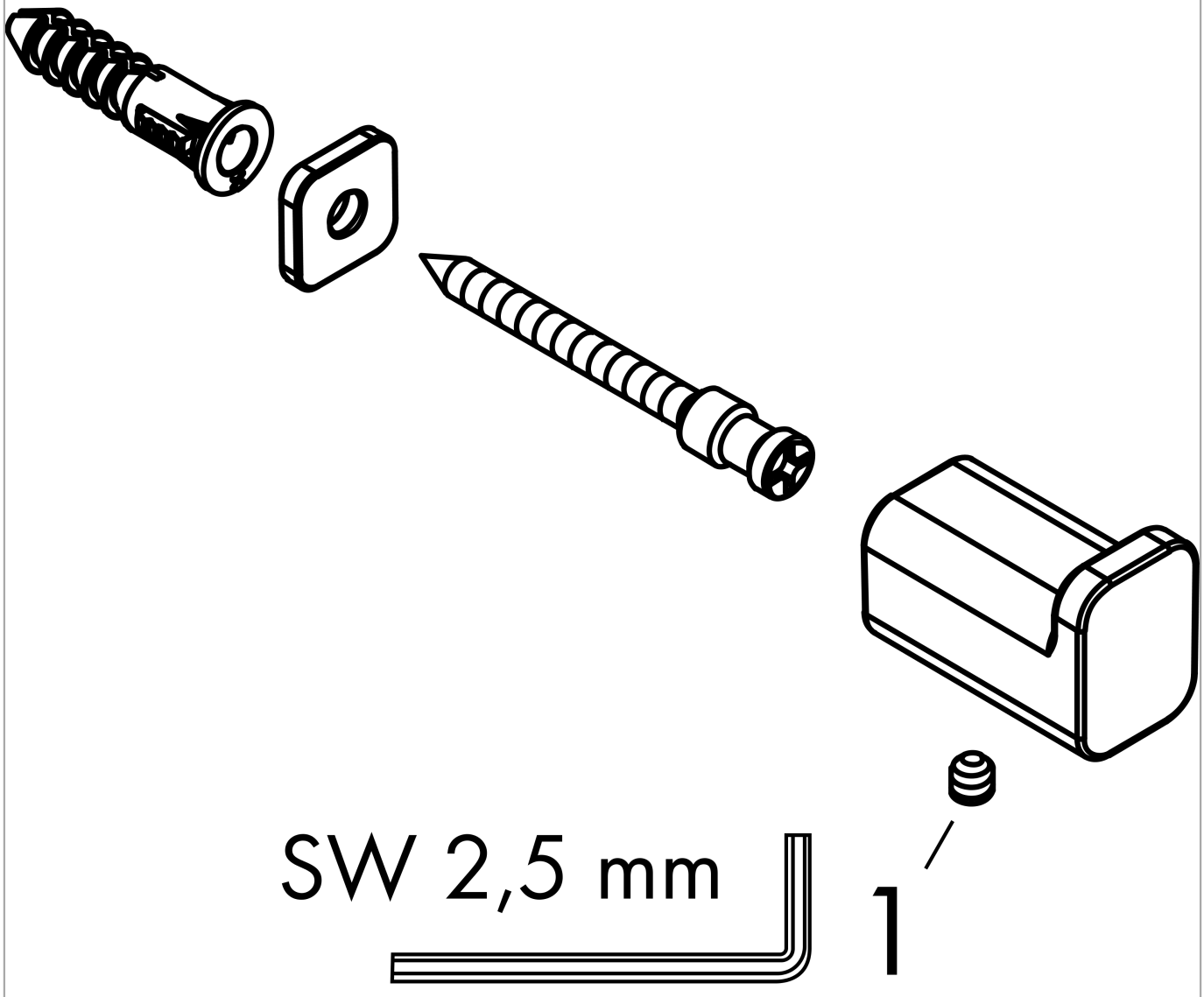

AddStoris
Towel hook
Finish: **Chrome** Article Number: **41742000**

Spare part list

Year of production: **>04/21**

Pos.	Description	Article Number	PC	PU
1	hollow set screw M5x6	94810000	2	1