hansgrohe

Pulsify Select S
Hand shower 105 3jet Activation
Finish: **Matt Black** Article Number: **24100670**

Description

product features

- shower head size: 105 mm
- spray type: PowderRain, IntenseRain, MonoRain
- convenient spray selection via Select button
- spray disc surface: graphite
- QuickClean: Limescale deposits can simply be rubbed off with your finger
- maximum flow rate at 3 bar: 11,5 l/min
- function from: 6,5 l/min
- minimum flow pressure: 0,8 bar
- with internal water conduction
- rinseable sieve insert
- connection thread: G ½
- suitable for continous flow water heaters

Technology

XXL Performance

Select

Quick Clean

Design awards

GERMAN INNOVATION AWARD '21 GOLD

iF DESIGN AWARD 2021

reddot winner 2021

Product image

Scale drawing

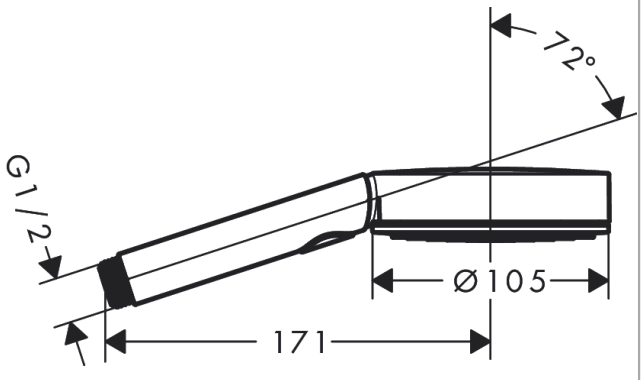

Flowchart

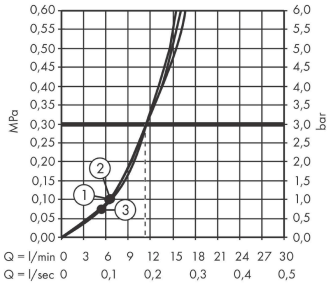

① Mono
② PowderRain
③ IntenseRain

The consumption was measured in combination with the appropriate fittings (thermostat/mixer/in-wall valve) to reflect actual application in practice.

Pulsify Select S
Hand shower 105 3jet Activation
Finish: **Matt Black** Article Number: **24100670**

Exploded Drawing

Year of production: **>06/21**

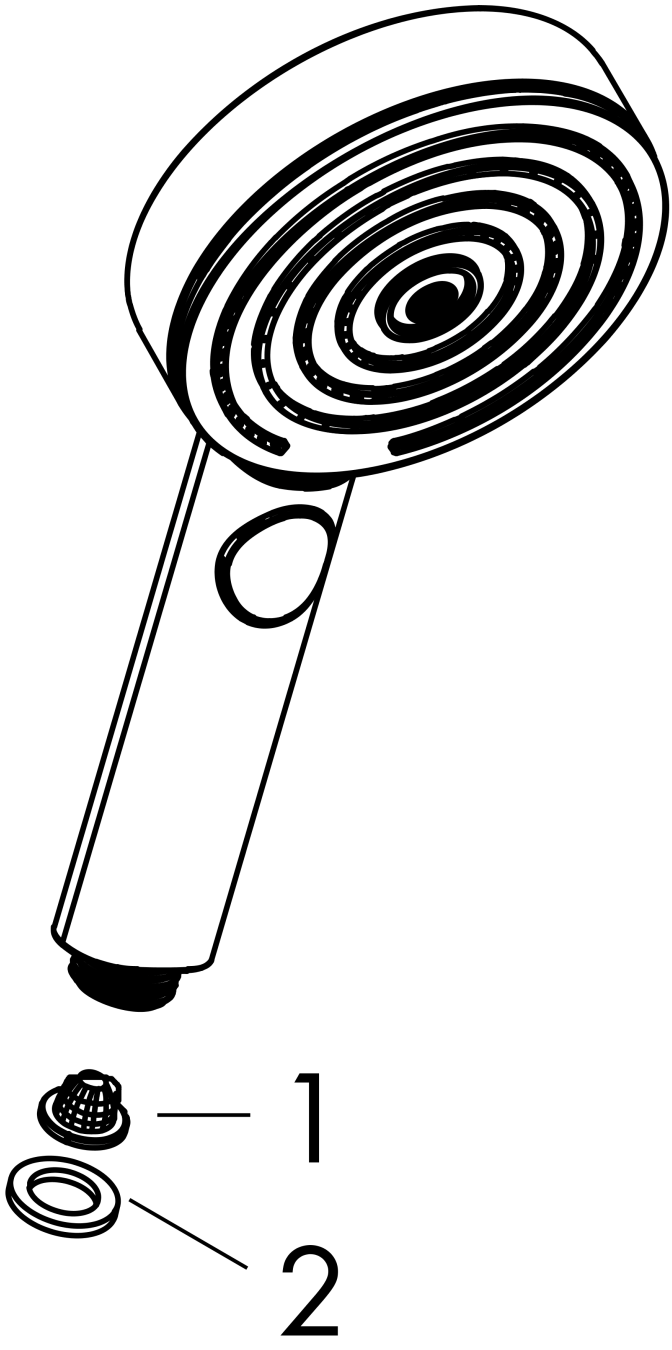

Pulsify Select S
Hand shower 105 3jet Activation
Finish: **Matt Black** Article Number: **24100670**

Spare part list

Year of production: **>06/21**

Pos.	Description	Article Number	PC	PU
1	filter	92672000	2	1
2	seal	98058000	1	1