Brand	hansgrohe
Art. Name	**Focus** Single lever bidet mixer with pop-up waste set
Art. Nr.	31920000
Surface	Chrome

Product picture

Drawing

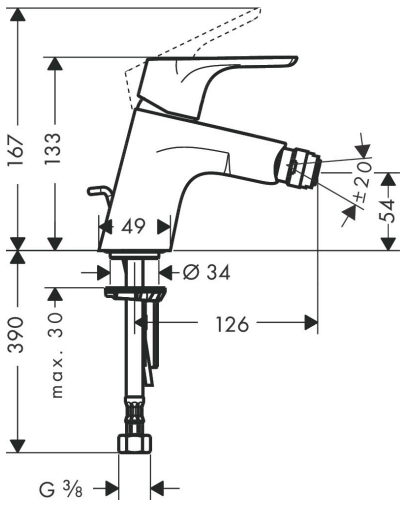

Features

- consists of: single lever bidet mixer, waste set
- projection: 126 mm
- spout height: 54 mm
- aerator with ball pivot
- spray type: normal spray
- maximum flow rate at 3 bar: 7,2 l/min
- ceramic cartridge
- temperature limitation adjustable
- suitable for continous flow water heaters
- material waste set: metal
- connection type: G ⅜ hose connections
- connection dimension: DN15

Technology

AirPower

Quick Clean

Certificates

EPD

Brand	hansgrohe
Art. Name	**Focus** Single lever bidet mixer with pop-up waste set
Art. Nr.	31920000
Surface	Chrome
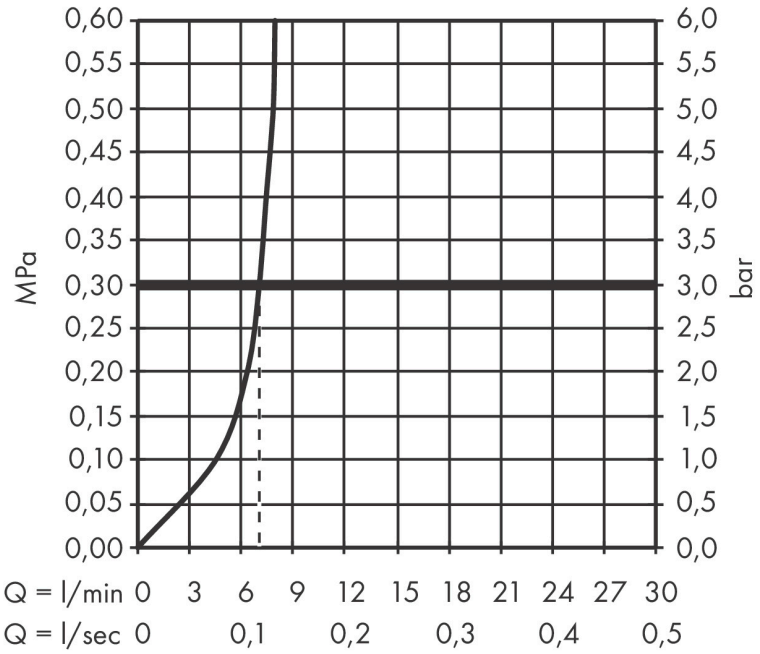
Flow chart